EQUIPMENT FURNISH AND INSTALL AGREEMENT

THIS AGREEMENT is made as of the 11th day of March in the year 2013, between **THE CITY OF LEESBURG, FLORIDA,** whose address is 501 West Meadow Street, Post Office Box 490630, Leesburg, Florida 34749-0630 (hereinafter referred to as the "CITY"), and **ODYSSEY MANUFACTURING COMPANY** whose address is 1484 Massaro Blvd., Tampa, FL 33618 (hereinafter referred to as the "CONTRACTOR").

NOW, THEREFORE, in consideration of the mutual benefits accruing to the parties to this Agreement, and for other good and valuable considerations, the parties agree as follows:

1. Services. The CONTRACTOR shall Furnish and Install two (2) HDPE Sodium Hypochlorite Storage Tanks. The CONTRACTOR shall also provide all labor, equipment, permits, tools and supervision necessary for completion of the work specified in the Invitation to Bid 130221 document.

2. Compensation. Scope of Services shall be completed for a total price of **$33,900.00**. This cost is the CONTRACTOR'S original bid amount of ($20,950.00) minus the cost of the Deduct Option for Reuse of Existing Ladders ($4,000.00) per tank. The cost of the services shall not exceed this amount unless the CITY has executed a written change order approving any increase in price or change to the scope of services. Said price includes all labor, equipment and materials needed to complete the project as described herein. Nothing herein shall limit the CITY'S right to obtain proposals or services from other contractors for similar projects.

3. Labor and Materials. All work will be done in a competent and workmanlike manner, using quality, new materials. CONTRACTOR shall warrantee all materials and workmanship furnished under this agreement as detailed in **EXHIBIT 'A'**.

4. Insurance and Indemnity Requirements.

A. The CONTRACTOR shall procure and maintain at its own expense, the following minimum insurance coverage.

a) All required insurance shall be provided by insurers acceptable to the CITY with an A.M. Best rating of at least A: VII.
b) The CONTRACTOR shall require, and shall be responsible for assuring that any and all of its subcontractors secure and maintain such insurance that are required by law to be provided on behalf of their employees and others until the completion of that subcontractors work.
c) The required insurance shall be secured and maintained for not less than the limits required by the CITY, or as required by law, whichever is greater.
d) The required insurance shall not limit the liability of the CONTRACTOR. The CITY does not represent these coverages or amounts to be adequate or

sufficient to protect the CONTRACTOR'S interests or liabilities, but are merely required minimums.

e) The provisions of the required insurance are subject to the approval of the CITY'S Risk Manager, and upon request, the CONTRACTOR shall make available certified copies of the various policies for inspection.
f) All liability insurance, except professional liability, shall be written on an occurrence basis.
g) The CONTRACTOR waives its right of recovery against the CITY to the extent permitted by its insurance policies.
h) Insurance required of the CONTRACTOR, or any other insurance of the CONTRACTOR shall be considered primary, and insurance of the CITY, if any, shall be considered excess as applicable to any claims which arise out of the agreement, contract or lease.

B. Certificate of Insurance - The CONTRACTOR shall provide evidence of required minimum insurance by providing the CITY an ACORD or other Certificate of Insurance in forms acceptable to the Risk Manager for the CITY, before any work under the agreement, contract or lease begins.

a) Except for workers' compensation and professional liability, the CONTRACTOR'S insurance policies shall be endorsed to name the CITY OF LEESBURG as additional insured to the extent of the agreement, contract or lease.
b) The Certificate(s) of Insurance shall designate the CITY as certificate holder as follows: City of Leesburg, Attn: Purchasing Manager, P.O. Box 490630, Leesburg, Florida 34749-0630.
c) The Certificate(s) of Insurance shall include a reference to the project and/or purchase order number.
d) The Certificate(s) of Insurance shall indicate that the CITY shall be notified at least thirty (30) days in advance of cancellation.
e) The Certificate(s) of Insurance shall include all deductibles and/or self-insurance retentions for each line of insurance coverage.
f) The CONTRACTOR, at the discretion of the Risk Manager for the CITY, shall provide information regarding the amount of claims payments or reserves chargeable to the aggregate amount of the CONTRACTOR' S liability coverage(s).

C. Comprehensive General Liability - The CONTRACTOR shall purchase and maintain Commercial General Liability coverage on forms no more restrictive than the latest editions of the Commercial General Liability policies of the Insurance Services Office (ISO). The Commercial General Liability policy shall provide minimum limits of **$1,000,000** per occurrence combined single limit that includes coverage for bodily and personal injury and property damage liability for premises, operations, products and completed operations*, independent contractors, contractual liability covering the agreement, contract or lease, broad form property damage coverages, and property damage resulting from explosion, collapse or underground exposures (x,c,u).

a) For remodeling and construction projects, the CONTRACTOR shall purchase and maintain products and completed operations coverage for a minimum of three (3) years beyond the CITY'S acceptance of the project.

D. Business Automobile Liability - The CONTRACTOR shall purchase and maintain Business Automobile Liability coverage on forms no more restrictive than the latest editions of the Business Automobile Liability policies of the Insurance Services Office (ISO). The Business Automobile Liability policy shall provide minimum limits of **$1,000,000** per occurrence combined single limit that includes coverage for claims for bodily injury and property damage arising from the use of motor vehicles, including on-site and off-site operations, and owned, non-owned and hired vehicles, and employee non-ownership use.

E. Workers' Compensation - The CONTRACTOR shall purchase and maintain Workers' Compensation insurance for all workers' compensation obligations imposed by state law and with employers liability limits of at least **$100,000** each accident and **$100,000** each employee with **$500,000** policy limit for disease.

CONTRACTORS exempt from maintaining Workers' Compensation insurance must provide a valid certificate of exemption issued by the State of Florida.

5. Indemnification. The CONTRACTOR agrees to make payment of all proper charges for labor required in the aforementioned work and CONTRACTOR shall indemnify CITY and hold it harmless from and against any loss or damage, claim or cause of action, and any attorneys' fees and court costs, arising out of: any unpaid bills for labor, services or materials furnished to this project; any failure of performance of CONTRACTOR under this Contract; or the negligence of the CONTRACTOR in the performance of its duties under this Contract, or any act or omission on the part of the CONTRACTOR, his agents, employees, or servants. CONTRACTOR shall defend, indemnify, and save harmless the CITY or any of their officers, agents, or servants and each and every one of them against and from all claims, suits, and costs of every kind and description, including attorney's fees, and from all damages to which the CITY or any of their officers, agents, or servants may be put by reason of injury to the persons or property of others resulting from the performance of CONTRACTOR'S duties under this Contract, or through the negligence of the CONTRACTOR in the performance of its duties under this Contract, or through any act or omission on the part of the CONTRACTOR, his agents, employees, or servants.

If however, this agreement is a "construction contract" as defined in and encompassed by the provision of Florida Statutes § 725.06, then the following shall apply in place of the aforementioned indemnification provision:

The CONTRACTOR shall indemnify the CITY and hold it, its officers, and its employees harmless from liabilities, losses, and costs, including, but not limited to, reasonable attorney's fees to the extent caused by the negligence, recklessness, or intentional wrongful conduct of the CONTRACTOR and persons employed or utilized by the CONTRACTOR in the performance of this Agreement. The liability of the CONTRACTOR shall, however, be limited to one million and 00/100 dollars ($1,000,000.00) per occurrence, and the obligation of the CONTRACTOR to indemnify the CITY shall be limited to acts,

omissions, or defaults of the CONTRACTOR; any contractors, subcontractors, sub-subcontractors, material men, or agents or employees of any of them, providing labor, services or materials in connection with the project; and the CITY, its officers, agents and employees, provided however that the CONTRACTOR shall not be obligated to indemnify the CITY against losses arising from the gross negligence, or willful, wanton, or intentional misconduct of the CITY, its officers, agents and employees, or against statutory violations or punitive damages except to the extent caused by or resulting from the acts or omissions of the CONTRACTOR, or any contractors, subcontractors, sub-subcontractors, material men, or agents or employees of any of them, providing labor, services, or materials in connection with this Agreement.

6. **Limitation of Liability.** CONTRACTOR shall in no event be liable for any indirect, special or consequential damages whatsoever, under any theory of relief, including without limitation, breach of warranty, breach of contract, tort (including negligence), strict liability, or otherwise, arising out of or related to CONTRACTOR's acts or omissions. Under no circumstances shall Vendor's liability to CITY exceed the contract price for the specific goods and services upon which the claim is based. Any action for breach of contract or otherwise must be commenced within one year after the cause of action was accrued.

7. **Codes, Laws, and Regulations**. CONTRACTOR will comply with all applicable codes, laws, regulations, funding requirements, standards, and ordinances in force during the term of this Agreement including those detailed in **EXHIBIT "A"**.

8. **Permits, Licenses, and Fees.** CONTRACTOR will obtain and pay for all permits and licenses required by law that are associated with the CONTRACTOR'S performance of the Scope of Services.

9. **Access to Records**. CONTRACTOR will maintain accounting records, in accordance with generally accepted accounting principles and practices, to substantiate all invoiced amounts. Said records will be available for examination by the CITY during CONTRACTOR'S normal business hours. Said records will be maintained for a period of three (3) years after the date of the invoice.

10. **Contingent Fees Prohibited.** The CONTRACTOR warrants that he or she has not employed or retained any company or person, other than a bona fide employee working solely for the CONTRACTOR, to solicit or secure this Agreement and that he or she has not paid or agreed to pay any person, company, corporation, individual, or firm, other than a bona fide employee working solely for the CONTRACTOR any fee, commission, percentage, gift, or other consideration contingent upon or resulting from the award or making of this Agreement. In the event of a breach of this provision, the CITY shall have the right to terminate this Agreement without further liability and at its discretion, deduct from the contract price, or otherwise recover, the full amount of any such fee, commission, percentage, gift or consideration paid in breach of this Agreement.

11. **Payment.** CITY shall compensate CONTRACTOR for their services in the following manner: **SEE EXHIBIT "A".**

12. **Ownership of Documents.** All data, specifications, calculations, estimates, plans, drawings, construction documents, photographs, summaries, reports, memoranda, and

other documents, instruments, information and material prepared or accumulated by the CONTRACTOR (or by such sub-consultants and specialty consultants) in rendering services hereunder shall be the sole property of the CITY who may have access to the reproducible copies at no additional cost other than printing. Provided, that the CONTRACTOR shall in no way be liable or legally responsible to anyone for the CITY'S use of any such materials for another PROJECT, or following termination. All original documents shall be permanently kept on file at the office of the CONTRACTOR.

13. Independent Contractor. The CONTRACTOR agrees that he or she is an independent contractor and not an agent, joint venture, or employee of the CITY, and nothing in this Agreement shall be construed to be inconsistent with this relationship or status. None of the benefits provided by the CITY to its employees, including but not limited to, workers' compensation insurance, unemployment insurance, or retirement benefits, are available from the CITY to the CONTRACTOR. CONTRACTOR will be responsible for paying his own Federal income tax and self-employment tax, or any other taxes applicable to the compensation paid under this Agreement. The CONTRACTOR shall be solely and primarily responsible for his and her acts during the performance of this Agreement.

14. Assignment. Neither party shall have the power to assign any of the duties or rights or any claim arising out of or related to the Agreement, whether arising in tort, contract, or otherwise, without the written consent of the other party. These conditions and the entire Agreement are binding on the heirs, successors, and assigns of the parties hereto.

15. No Third Party Beneficiaries. This Agreement gives no rights or benefits to anyone other than the CONTRACTOR and the CITY.

16. Jurisdiction. The laws of the State of Florida shall govern the validity of this Agreement, its interpretation and performance, and any other claims related to it. In the event of any litigation arising under or construing this Agreement, venue shall lie only in Lake County, Florida.

17. Term. The term of this Agreement shall be for a period of one (1) year or until the terms and conditions of this Agreement, including, but not limited to, its Scope of Services, have been completed, whichever occurs first, as determined by the CITY.

A. Time of Completion. The Scope of Services shall be completed within 60 calendar days from date of Notice to Proceed or purchase order being issued by the CITY to the CONTRACTOR.

18. Termination. All or part of this Agreement may be terminated by the CITY for its convenience on fifteen (15) days written notice to the CONTRACTOR. In such event, the CONTRACTOR will be entitled to compensation for services competently performed up to the date of termination according to the 'Cancellation Charges' clause in this Agreement.

A. Default. Each of the following shall constitute a default under this Agreement: (a) CONTRACTOR is adjudged to be bankrupt; (b) CONTRACTOR makes a general assignment for the benefit of its creditors; (c) CONTRACTOR fails to comply with any of the terms, conditions or provisions of this Agreement; or (d)

CONTRACTOR's experiencing a labor dispute which threatens to have a substantial, adverse impact upon performance of this Agreement. If, during the term of this Agreement, CONTRACTOR shall be in default of this Agreement, CITY may suspend its performance hereunder until such delinquency or default has been corrected; provided, however that no suspension shall be effective unless and until CITY gives written notice of default to CONTRACTOR with at least (10) days to cure such default. If CONTRACTOR fails to correct such delinquency or default, CITY may terminate this Agreement and pursue such remedies as may be available at law or in equity. CONTRACTOR shall be paid compensation for services satisfactorily performed and completed as of the date of termination. CITY shall not be liable for partially completed Work. In addition to the remedies available hereunder, the CITY shall have the right of offset from sums or payments otherwise due the CONTRACTOR, any sums or amounts which the CONTRACTOR may owe to the CITY pursuant to the provisions of this Agreement and seek such remedy as may be available, including, but not limited to satisfaction of the performance bond. It is not the intention of this paragraph to limit or prevent delay damages or other damages that may occur.

B. For Convenience. Notwithstanding any other provision of this Agreement, CITY may, upon prior written notice to CONTRACTOR, terminate this Agreement with or without cause. In the event of such termination, CITY shall be liable only for the payment of all unpaid charges, determined in accordance with the provisions of this Agreement, for work, properly performed prior to the effective date of termination.

19. Notice to Proceed. The CITY authorizes CONTRACTOR to begin work by supplying a fully executed Agreement AND City Purchase Order.

20. Contact Person. The primary contact person under this Agreement for the CONTRACTOR shall be PATRICK ALLMAN. The primary contact person under this Agreement for the CITY shall be AL PURVIS.

21. Approval of Personnel. The CITY reserves the right to approve the contact person and the persons actually performing the services on behalf of CONTRACTOR pursuant to this Agreement. If CITY, in its sole discretion, is dissatisfied with the contact person or the person or persons actually performing the services on behalf of CONTRACTOR pursuant to this Agreement, CITY may require CONTRACTOR assign a different person or persons be designated to be the contact person or to perform the CONTRACTOR services hereunder.

22. Disclosure of Conflict. The CONTRACTOR has an obligation to disclose to the CITY any situation that, while acting pursuant to this Agreement, would create a potential conflict of interest between the CONTRACTOR and his duties under this Agreement.

23. Special Provisions. CONTRACTOR shall comply with all special terms & conditions/special provisions required by the United States Environmental Protection Agency regarding Conformance Upgrades of Generators in Compliance with the National Emission Standards for Hazardous Air Pollutants (NESHAP) for Stationary Reciprocating Internal

Combustion Engines (RICE) as promulgated by Title 40 Code of Federal Regulations Part 63, Subpart ZZZZ.

24. Authority to Obligate. Each person signing this agreement on behalf of either party individually warrants that he or she has full legal power to execute this Agreement on behalf of the party for whom he or she is signing, and bind and obligate such party with respect to all provisions contained in this agreement.

25. Counterparts. Original signatures transmitted and received via facsimile or other electronic transmission of a scanned document, (e.g., PDF or similar format) are true and valid signatures for all purposes hereunder and shall bind the parties to the same extent as that of an original signature. Any such facsimile or electronic mail transmission shall constitute the final agreement of the parties and conclusive proof of such agreement. Any such electronic counterpart shall be of sufficient quality to be legible either electronically or when printed as hardcopy. The CITY shall determine legibility and acceptability for public record purposes. This Agreement may be executed in one or more counterparts, each of which shall for all purposes be deemed to be an original and all of which shall constitute the same instrument.

[*Rest of page intentionally left blank.*]

IN WITNESS WHEREOF, the parties hereto have executed this Agreement on the respective dates under each signature.

THE CITY OF LEESBURG, FLORIDA

By: _____
Mayor/Commissioner

ATTEST:

_____
City Clerk

APPROVED AS TO FORM:

_____
City Attorney

ODYSSEY MANUFACTURING COMPANY

By: _____

Printed Name: Patrick H. Allman

Title: General Manager

Date: 25 FEB 13

EXHIBIT "A"

SCOPE OF SERVICES

I. **Scope of Work.** CONTRACTOR shall provide all labor, equipment, material, supervision and transportation necessary to Supply and Install equipment, related to the work indentified in Invitation to Bid (ITB) 130221.

II. **General Terms and Conditions.** The general terms and conditions from ITB 130221 are incorporated by reference and made a part hereof.

III. **Special Conditions.** The special conditions from ITB 130221 are incorporated by reference and made a part hereof.

IV. **Supplemental Conditions.** The supplemental conditions from ITB 130221 are incorporated by reference and made a part hereof.

V. **Addenda.** Not Applicable.

VII. **Vendor Bid Response.** The vendor bid response submitted February 8, 2013, and drawing submitted February 19 via email in regard to ITB 130221 is incorporated in its entirety by reference and made a part hereof.

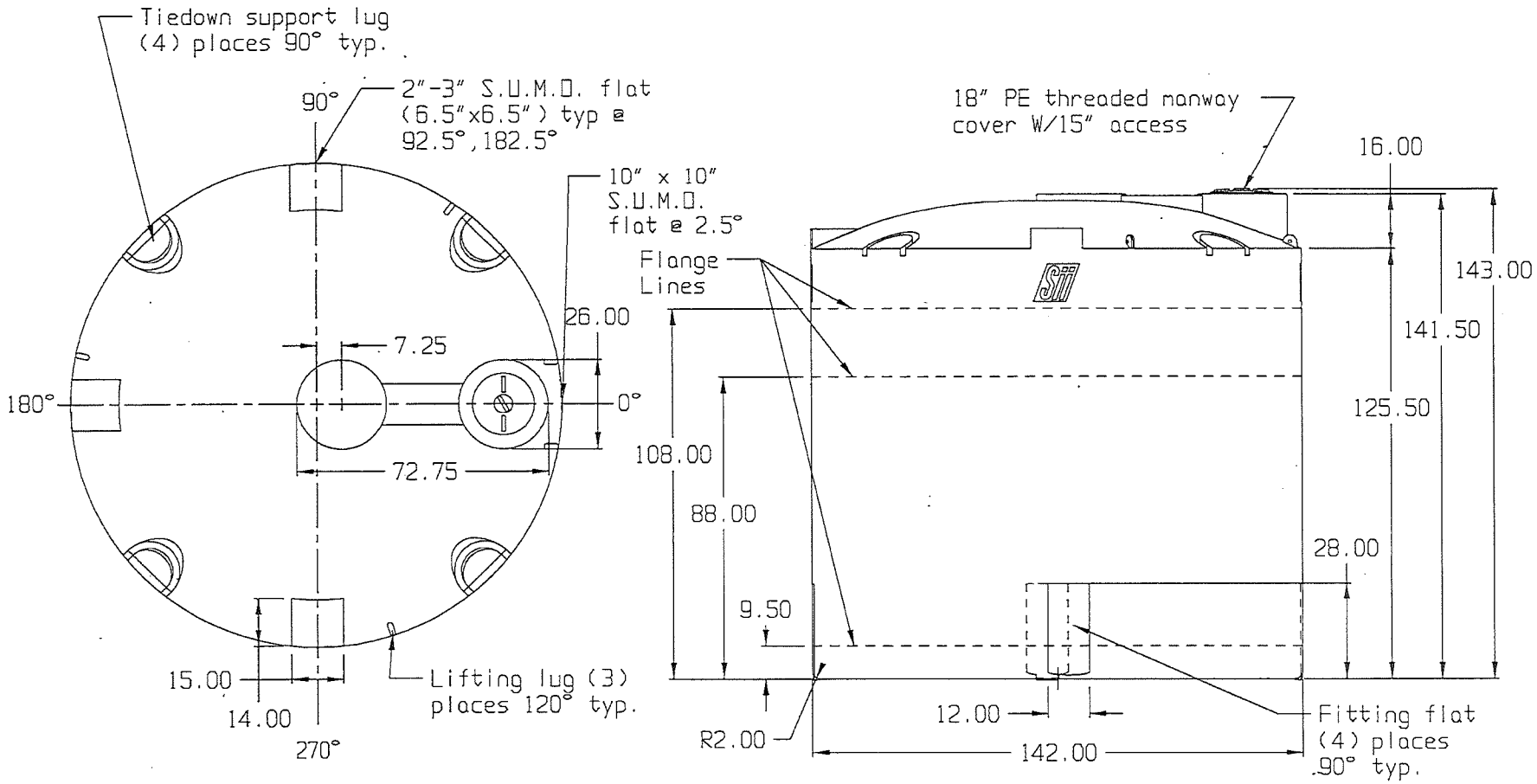

SNYDER INDUSTRIES INC.

(all dimensions in inches)

BASE FITTINGS TO BE LEFT INSTALLED AT TIME OF SHIPMENT PER Sii PROCEDURE

8,750 GALLON FLAT BOTTOM TANK

PART # TANK: 5360--L

REF#: 0000 12/02/02