SPEED TABLE 2 DETAIL

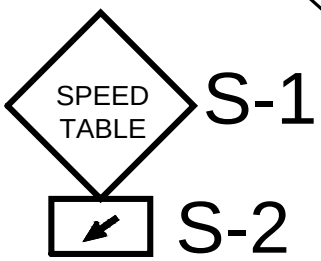

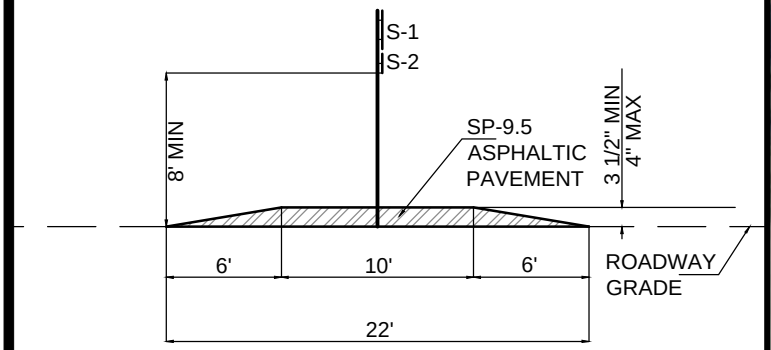

SPEED TABLE 1 DETAIL

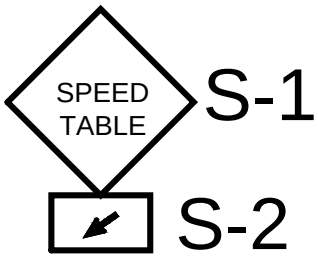

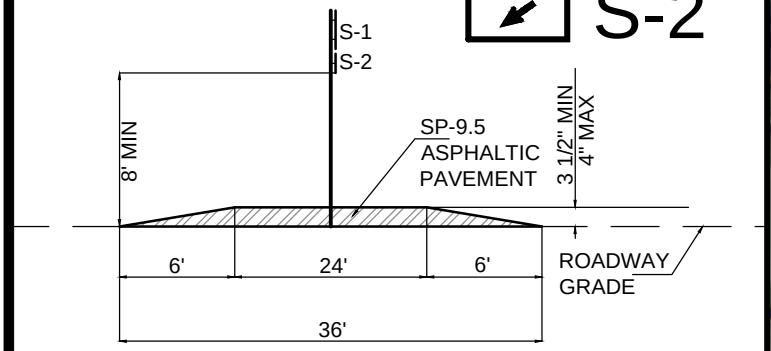

PEDESTRIAN CROSSWALK

CITY OF LEESBURG
PUBLIC WORKS DEPT.
ENGINEERING DIVISION
550 S. 14th ST. - P.O. BOX 490630
LEESBURG, FLORIDA 34749
PHONE (352) 728-9755
FAX (352) 728-9879

SKETCH OF TRAFFIC CALMING

13TH STREET TRAFFIC CALMING
TABLE PLACEMENT AND DETAIL

DATE: 10/01/2014
DRAWN: A. PARKER
CHECKED: DCM
APPROVED: DCM
SCALE: NTS
FILE NO.: TRAFFIC

SHEET NUMBER
1
OF
1